BF_3 Proportional Counters

www.centronic.co.uk

GENERAL DATA

General Description

The BF_3 Proportional counter employs the ^{10}B (n.α) reaction for the detection of thermal neutrons. Excellent characteristics are obtained, combining high detection efficiency and low background with excellent discrimination against gamma radiation. The counters have been designed for use either with collimated beams of neutrons incident at one end of the counter, or under total irradiation conditions. These counters can be employed in gamma fluxes up to typically 100 R/hr, depending on the particular detector used, with a maximum counting rate around 10^5 cps. The life of the counter, defined as a 10% reduction in original sensitivity, is in excess of 10^{17} nvt. Counters of the type described here have been produced in large quantities and the technique of manufacture gives consistent and reproducible results. The design is adaptable to the wide range of counter sizes and sensitivities required in instrumentation systems and in experimental work for the measurement of neutron flux in the thermal and epithermal energy range.

Construction

The counter is of metal construction, featuring a thin wall to minimise neutron capture. The cylindrical body of the counter forms the cathode. The anode is a wire mounted, centrally, in the tube. The anode connection is brought out at one end via a suitable seal and various possible connectors. Where the body of the counter is assembled from more than one section they are suitably jointed to ensure good electrical and mechanical performance. The design of the joint is such that no part of the detector exceeds the cathode tube diameter.

Electrical Characteristics

The kinetic energy of the ionising particles, resulting from the (n,α) reaction with ^{10}B is $2 \cdot 4$ MeV in 93% of the reactions and $2 \cdot 85$ MeV in the remaining 7%. The maximum pulse amplitude available from an event, resulting when the whole of the particle energy is dissipated in the gas, is given approximately by:-

$$V = \frac{M}{C} \times 10^{-2}$$



where

M = gas multiplication,
C = total input capacity in pF,
V = pulse amplitude in volts.

The maximum charge per pulse (q) is,

where

W_p = Particle energy in electron volts,
W_i = Energy required per ion pair (approx. 33 eV in BF_3),
e = Electronic charge.

$$q = \frac{MW_p e}{W_i} \text{ Coulombs}$$

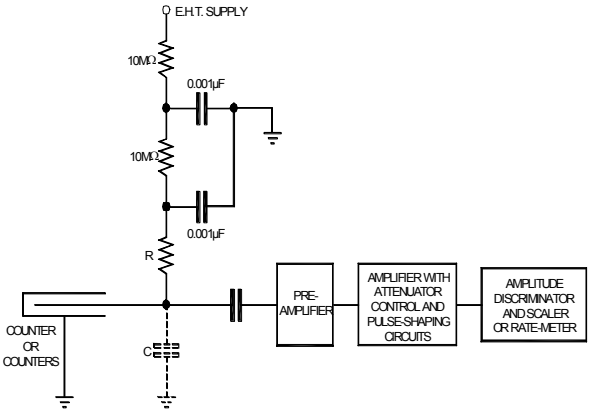

Fig. 1 – Schematic of counter, amplifier and pulse-counting circuit

BF_3 Proportional Counters

www.centronic.co.uk

Fig 1. shows a schematic of a typical circuit used in fixed installations with BF_3 proportional counters. The e.h.t. filter circuit and the counter anode load resistor R may be mounted in the preamplifier unit. It is often advantageous however to have this circuit in a sealed and desiccated case to reduce spurious pulses due to breakdown across insulators caused by dust or condensed moisture. The value of the anode load resistor R is chosen so that the time constant RC of the input circuit to the pre-amplifier is large compared with the differentiating time constant used in the later stages of the amplifier. The capacitance C is the total input capacitance in pF.

The amplifier is usually composed of two sections, a pre-amplifier and a main amplifier. The pre-amplifier unit normally has a fixed gain (in the range 10 -100) and is placed as near as possible, or as convenient, to the counter so as to minimise the input capacitance to the pre-amplifier. The main amplifier section contains power supplies, further stages of amplification having gain typically adjustable from 10^2 to 10^4 and pulse shaping circuits (differentiating and integrating circuits).

Pulse time delays

In a proportional counter the time delay between an (n,α) reaction and the rise of the output pulse will depend on the position and orientation of the initial ionising track and the size, gas pressure and operating voltage of the counter. As examples, the time spread or jitter in the pulse for a nominal 25 mm diameter counter filled at 40 cm Hg and operated at 2,400 volts has been measured as 0.6 microseconds; a 50 mm diameter counter filled at 70 cm Hg and operated at 4,000 volts has been measured as 2.75 microseconds.

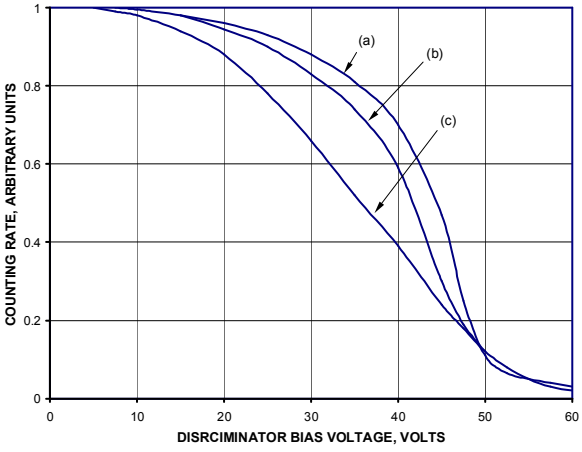

Fig 2. – Integral bias curves for 25 mm diameter BF_3 counters with 0.05 mm diameter anode wires

(a) BF_3 Pressure 20 cm Hg;
(b) BF_3 Pressure 40 cm Hg;
(c) BF_3 Pressure 70 cm Hg;

Counting characteristics

The bias characteristic shown in Fig. 2 refers to counters operating at M = 40, amplifier differentiating and integrating time constants of 0.8 and 0.08 microseconds respectively and a total input capacitance of 120 pF. These conditions are typical of many practical applications. The amplifier input sensitivity required for an operating point on the bias curve equivalent to 0.2 of the maximum pulse height, is about 4.8 x 10^{-4} volts. The equivalent input charge sensitivity is about 5.7 x 10^{-14} coulomb or 3.6 x 10^5 ion pairs.

Counting rate/discriminator-bias characteristics for 25 mm diameter counters at three gas pressures (20, 40 and 70 cm Hg) are shown in Fig. 2. The maximum lengths of the ionised tracks in the BF_3 gas at 20, 40 and 70 cm Hg pressure are approximately 2·0, 1·0 and 0·6 cm respectively. The improved integral bias curves obtained at higher gas pressures are attributed to a reduced wall effect, i.e. the proportion of particles dissipating a large fraction of their energy in the walls of the counter is reduced. This is further demonstrated by the differential bias characteristics for 25 and 50 mm diameter counters filled at 40 cm Hg, shown in Fig. 3. These graphs are based on experimental data in which the whole counter was uniformly irradiated.

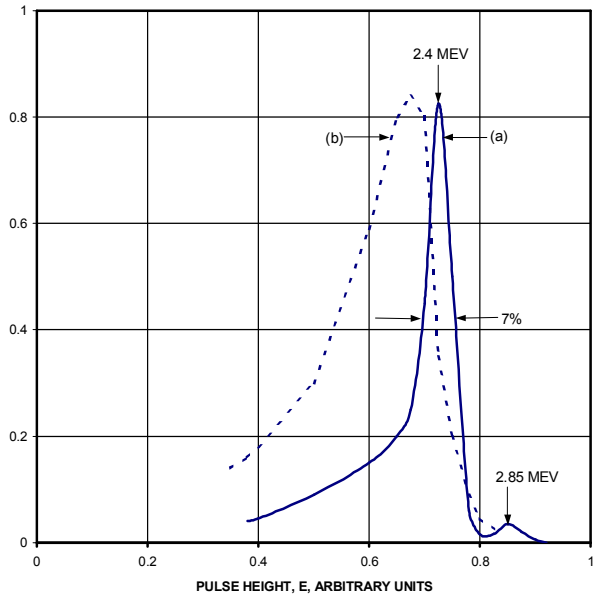

Fig 3. - Differential-bias curves

(a) 25 mm diameter counter
(b) 50 mm diameter counter

BF_3 Proportional Counters

www.centronic.co.uk

Gas Multiplication

Gas Multiplication is a function of the counter anode and cathode diameters, the gas pressure, and anode voltage. Fig. 4 shows the relationship between gas multiplication and anode voltage for a range of typical counters. It is recommended that, for normal use, the counter be operated with a gas multiplication of between 10 and 40 as indicated on the graphs. Gas multiplication between 40 and 100 can be used for short term measurements but the life of a counter operated at values greater than 100 will be considerably reduced.

Recommended operating voltages stated on individual data sheets are usually set at a level to optimise resolution and will also normally meet this requirement for gas multiplication.

Fill Gas

Most counters are filled with BF_3 gas enriched in the Boron 10 isotope to typically 96%. Enriched boron filled counters have significantly higher sensitivity to neutrons than those filled with natural Boron (which has approx. 20% Boron 10). Centronic have the capability of manufacturing counters filled with natural Boron if required.

Response to Gamma Radiation

The magnitude of the individual pulses due to gamma ray interactions in the counter walls and gas is determined by the counter dimensions and gas pressure. For a 25 mm diameter counter filled with a pressure of 40 cm Hg, the average pulse height due to 1 MeV gamma radiation is of the order of 0.01 of the maximum neutron pulse height.

When the mean interval between gamma pulses becomes less than the resolving time of the counter and associated circuits, pulse build up will occur and counts due to the gamma radiation will be registered at high discriminator bias levels.

Boron Lined Proportional Counters

Another range of Centronic products, Boron lined proportional counters, has been developed for use at low pressure levels in nuclear reactors where the temperature limitations of BF_3 counters prevents their use. Chambers are constructed in stainless steel and use a lining of enriched boron on the inside of the cathode. The inert gas filling is Argon and Carbon Dioxide. Ceramic to metal seals are employed as the electrical leadthrough to provide robust construction. The sensitivity of Boron Lined Proportional Counters are similar to BF_3 counters of comparable physical dimensions. Characteristics, however, are not as good as a BF_3 proportional counter.

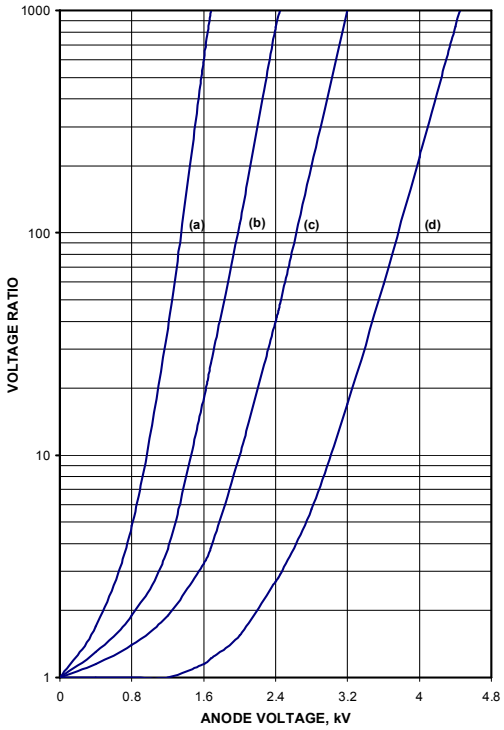

Fig 4. – Gas multiplication, M, as a function of anode voltage

(a) 25 mm cathode diameter, BF_3 pressure 20 cm Hg;
(b) 25 mm cathode diameter, BF_3 pressure 40 cm Hg;
(c) 25 mm cathode diameter, BF_3 pressure 70 cm Hg;
(d) 50 mm cathode diameter, BF_3 pressure 70 cm Hg;

(a, b & c have 0.05 mm Anode, d has 0.1 mm)

Use in High Neutron Flux

Pulse type counters may be required in reactor control instrumentation systems for neutron flux measurement at sub-critical levels and during start up of the reactor. Under these conditions the ratio between neutron and gamma radiation fluxes is too low for the use of mean current ionisation chambers.

When the reactor power level increases beyond the range of pulse type counters, it is necessary to retract the counter to a position of reduced neutron flux to avoid excessive activation of the counter body, so that it can be used again at low neutron flux levels when the reactor is shut down. It is also necessary to switch off the H.T. anode supply to avoid the deterioration effects which result from a large number of counter discharges.

The effect of a high β - γ activity induced in the materials of the counter is similar to that of a high γ–radiation dose rate. The recovery of satisfactory γ discrimination performance after activation is dependent upon the amplifier time constants employed.

BF_3 Proportional Counters

www.centronic.co.uk

For example, when types 13.5B20/25 and 13.5EB40/25 counters (formerly designated 12B20 and 12EB40) were irradiated for ten days in a thermal neutron flux of 3 x 10^9 nv (i.e. integrated flux of 2·5 x 10^{15} nvt) with zero anode voltage, they showed no deterioration in their characteristics. The 12·8 hour β - γ activity of copper 64 immediately after removal from a flux of 3 x 10^9 nv is, however, too high to enable neutron pulses to be distinguished. After a decay period of about 7 half-lives (i.e. a factor 128 reduction in activity), good discrimination can be obtained between neutron pulses and the effect of the copper 64 activity.

Counters of this size should therefore be retracted to a position where the thermal neutron flux is less than about 2 x 10^7 nv at full power operation. The residual activity will then be sufficiently low to avoid difficulty in discriminating between neutron pulses and β - γ 'pile-up'. At this flux level the exposure period for an integrated flux of 2·5 x 10^{15} nvt will be approximately three years.

Measurement of Intermediate Energy Neutrons

Although essentially a thermal neutron counter with a useful energy range from ·025 to 10^3 eV, an investigation has established that BF_3 counters with a cadmium coating can be used for the measurement of the dose rate from intermediate energy neutrons. In the neighbourhood of large nuclear reactors the flux spectrum of intermediate energy neutrons is approximately inversely proportional to the neutron energy (an E^{-1} law). In the energy range 0·1 to 10^5 eV, and in situations where the neutron spectrum obeys the E^{-1} law, measurements of dose-rate can be made using Centronic BF_3 counters covered by a cadmium sleeve 0.9 mm thick. The following table gives the relevant information for typical examples;

BF_3 Counter Type	Sensitivity in a Unit Westcott Flux	Dose rate Sensitivity
13.5B20/25	0×3	1×65
13.5EB40/25	3×0	16×4
15EB70/50	27×5	164

Sensitivity; cps/nv

Dose rate Sensitivity; cps/mrem hr^{-1}

Connectors

Although counters can be provided in flying lead form, the use of a factory fitted connector is recommended. Various connectors are available with typical examples being listed on relevant data sheets. The connectors to be fitted should be specified with the order.

The mating connector for fitting to the counter connector is not supplied unless specially ordered. When mating connectors are ordered details of the cable to be used must also be specified in the order to ensure supply of a suitable component.

Maximum Temperature

The high temperature performance of BF_3 proportional counters is dependent upon the outgassing treatment during manufacture. Centronic BF_3 counters are outgassed at typically 400°C during manufacture. Counters have been operated continuously at 100°C for some months without appreciable change in characteristics and 100°C is a conservative maximum temperature rating for these tubes for continuous operation.

Counters can be operated at higher temperatures up to 200°C but changes in characteristics must be expected with time.

A practical limitation on temperature is the insulation material used in fixed connectors, where fitted. This commonly limits the maximum temperature to a value below the possible operating range of an unterminated version and must be considered when selecting any particular counter.

For high temperature operation, up to 250°C, the separate range of Boron Lined Proportional Counters (discussed earlier) has been developed.

Maximum Pressure

For the 25 mm diameter counters, for example, the maximum external pressure before collapse at room temperature lies in the region of 550 KPa, depending upon the overall length of the counter. Special counters have been developed for specific applications such as reactor commissioning experiments where high external pressures are experienced. Such requirements can be considered as special orders.

BF_3 Proportional Counters

www.centronic.co.uk

Terminology and Units of Measure

The terminology and units of measure used in this technology can become complex. Where possible, standard units are used and specific abbreviations, such as M for gas multiplication, are defined at the time of use.

The counter output is measured in terms of the rate of output pulses, or counts. This is therefore measured in counts per second, abbreviated to cps.

The characteristic of the neutron field being measured is the density of the neutron flux. This is measured in terms of the number of neutrons crossing an area of 1 square cm per second. Neutron flux density can therefore be defined in terms of $n.cm^{-2}.s^{-1}$ where n is a unitless number meaning 'neutrons'.

Historically, however, neutron flux density has always been considered as the number of neutrons contained within 1 cubic centimetre multiplied by the average neutron speed in centimetres per second. It is designated 'nv'. Whilst the numeric value obtained is the same as in the definition of the above paragraph, the 'n' of 'nv' is not unitless but represents the number of neutrons per cm^3. Velocity is represented by v in $cm.s^{-1.}$

In terms of neutron flux density, therefore, nv is equivalent to $n.cm^{-2}s^{-1}$ because of the different usage of the term 'n'.

Integrated flux over a period of time is normally designated 'nvt', although it's units are neutrons/ cm^2.

The situation becomes more complex when counter sensitivity is considered since this is now a ratio of two rates, or time dependant factors. Sensitivity is designated cps/nv.

Nomenclature

The letters EB in the type reference indicate the use of filling gas enriched in the boron 10 isotope. Natural Boron filled counters are identified by letter B alone. The number preceding the letters in the type designation denotes the active length of the counter, in centimetres. The number immediately after the EB (or B) denotes the gas filling pressure in cm Hg. A further number (after the /) indicates the cathode diameter in mm.

Example: 107EB70/50

107	....	Active length (cm)
EB	....	Enriched BF_3 gas filling
70	....	Gas pressure (cm. Hg).
50	....	Cathode diameter (mm)

References

Characteristics of BF_3 Counters and Precautions to be Adopted in their Use
(J. Sharpe, P. G. Salmon – 1952)
(A.E.R.E. Report EL/R 1073)

Deterioration of Boron Trifluoride Counters due to High Counting Rates
(R. K. Soberman, et al, -1953)
(Review of Scientific instruments, Vol 24 No. 11)

Delays in BF_3 Proportional Counters:
(K. P. Nicholson - 1955)
(A.E.R.E. Report N/R 1639)

Boron trifluoride proportional counters
(W. Abson, P.G. Salmon, S. Pyrah - 1958)
(Proc. I.E.E. 105B, 357)

The measurement of Intermediate Energy Neutron Dose Rate with Cadmium Covered BF_3 Counters:
(J. A. Dennis - 1962)
(A.E.R.E. Report M. 1050)

Due to our policy of continued development, specifications are subject to change without notice.

CENTRONIC LTD - ***Radiation Detectors***
King Henry's Drive, Croydon, Surrey, CR9 0BG, United Kingdom
Telephone: 01689 808032 Facsimile: 01689 845117
Email: rdsales@centronic.co.uk Web: www.centronic.co.uk

FM25100 EMS68441