1.

SECTION I
GENERAL DESCRIPTION

1-1. GENERAL.

1-2. TheModel 412A/ AR DC Vacuum Tube Voltmeter is a precision, wide range, multipurpose instrument which covers the entire range of dc voltage, current, and resistance measurements normally encountered in electronic equipment.

1-3. It measures de voltages over the wide range of 0.02 millivolts to 1000 volts on thirteen ranges arranged in al, 3, 10 sequence from 1 mv full scale to 1000 v full scale. Overall accuracy on all thirteen ranges Iswíthín ±1 % of full scale. Voltage differences can be measured easily since the input circuit is íso-lated from the case and from the power line ground.

1-4. DAMAGE IN SHIPMENT.

1-5. Inspect and operate this instrument upon receipt. Section I'V includes a performance check which is a good test as part of incoming quality control inspection. The check can be made with the instrument in its cabinet. If there is any damage, see the "Claírn for Damage in Shipment" paragraph at the back of this manual.

1-6. POWER CABLE.

1-7. The three-conductor power cable supplied with this instrument terminates in a polarized three-prong male connector recommended by the National Electrical Manufacturers' Association. The third contact is an offset round pin added to a standard two-blade connector. This contact grounds the instrument when used with an appropriate receptacle. An adapter should be used to connect the NEMA plug to a standard two-contact output. When the adapter is used, the ground connection be comes a short lead from the adapter. This lead should be connected to a suitable ground for the protection of operating personnel.

1-8. 115-230 VOLT OPERATION.

1-9. A switch located on the instrument rear converts the Model 412A/ AR for use from either a 115-volt or 230-volt, 50-60 cps power source. The switch changes the connection of the dual 115-volt primary windings of the power transformer from a parallel combination to a series combination, or vice versa. Switch positions are marked 115 and 230.

1-10. To convert the instrument from 115-volt operation to 230-volt operation, or vice versa, insert a screwdri ver blade into the switch slot and slide the slot until the marking indicates the line voltage. At the time of the change, replace the line fuse. A 0.6 ampere slow-blow fuse should be used for 115-volt operation; a 0.4 ampere slow-blow fuse should be used for 230-volt operation.

CAUTION
Be sure the 115/230 V switch is set at the proper position before applying power to the instrument Incorrect setting of the switch can result in damage to the instrument.



SECTION II
OPERATING INSTRUCTIONS

2-1. **LOW-LEVEL ELECTRICAL PHENOMENA.**
2-2. Stray low-level electrical phenomena are present in one form or another, in nearly all electrical circuits. The 412A does not distinguish between stray and signal voltages; ít measures net voltage. Thus, when using the lower voltage ranges, consider the pos sib ilit Ƴ of low -level electrical phenomena. Thermocouples (thermoelectric effect), flexing of coaxial cables (triboelectric effect), apparent residual charges on capacitors (dielectric absorption), battery action of two terminals mounted on an imperfect insulator (galvanic action) all can produce voltages within the range of the 412A.

2-3. The 412A voltage probe, current/resistance lead and common lead are designed to have a very low thermoelectric effectwith copper, the most complete electrical conductor. However, you may encounter other materials. For example, the leads of many transistors are made of a rnixture of iron, nickel and cobalt known commercially as Kovar, Fernico, etc. This material makes a very good thermocouple with copper: about 40 ȣv /oC with respect to a reference junction.

2-4. Whenever possible, connect the 412A leads to copper and maintain the points of connection at the same temperature, preferably ambient temperature. With the leads so connected, any voltage indicated by the 412A is developed within the circuit under test.

2-5. **OPERATING INSTRUCTIONS.**

CAUTION

DO NOT OVERT~OAD THE INSTRUMENT. AMPLIFIER INPUT, CURRENT SHUNTS, AND INTERNAL RESISTANCE STANDARDS ARE NOT PROTECTED FROM EXTREME OVERLOAD. MOMENTARY OVERLOADS TEN TIMES FULL SCALE WILL NOT DAMAGE THE INSTRUMENT.

2 -6. Turn the Model 412A on and allowa few minutes warmup.

2-7. VOLTAGE MEASUREMENT.
a. Set FUNCTION selector to VOLTS.
b. Set POLARITY switch to desired polarity.
c. Set RANGE switch to desired range.
d. Use VOLTS and COM leads to connect ínstru-ment across circuit or component, and read voltage.

2-8. CURRENT MEASUREMENT.
a. Set FUNC TION selector to MA.
b. Set RANGE switch to desired range.
c. De-energize circuit to be tested.
d. Use MA/OHMS and COM leads to connect instrument into circuit.
e. Energize circuit, set POLARITY switch for upscale reading, and read current.

----------NOTE----------
When measuring current, be sure there is no connection between the chassis-ground and cabinet-ground terminals of the DC AMPLIFIER OUTPUT connector.

2-9. RESISTANCE MEASUREMENT.
a. Set FUNCTION selector to OHMS.
b. De -energize circuit to be measured.
c. Use MA/OHMS and COM leads to connect instrument across circuit or component.
d. Select range which brings meter pointer as close as possible to midscale, and read resistance.

2 -10. When measuring the resistance of non-linear devices such as crystal diodes or transistors, you may want to know the voltage applied to the device and/or the current through it at the time of measurement By using Table 2 -1 and the upper voltage scale on the meter face, you can determine both. The meter reading is directly proportional to the voltage across the device being measured, and the meter reading subtracted from full scale is directly proportional to the current. For example, on the X10 range the supper voltage scale is a 0-100 mv scale and a 10-0 ma scale. If the meter indicates .25 on the resistance scale, the device being measured has an equivalent resistance of 2.5 ohms. But the meter also indicates .2 on the upper voltage scale; thus, from Table 2 -1, the device has 2. 5-ohms equivalent resistance with 20 mvacross it and 8 ma flowing through it.

2-11. OPERATION WITH A RECORDER.

2-12. To obtain permanent records of 412Areadings, connect a recorder to the OC AMPLIFIER OUTPUT connector and operate the '412A as directed above. The output of the 412A is 1 volt at full scale; ti necessary, Externally attenuate the 412A output to match it with recorder sensitivity. Maximum rated load current from the 412A is 1 ma. A load resistance of less than 1000 ohms may cause the load current to exceed 1 ma and thus cause errors in meter indication and amplifier gain.

SECTION 111
CIRCUIT OPERATION

3-1. GENERAL

3-2. The Model 412A is basically a 0 to 0.9 millivolt dc voltmeter. Precision voltage dividers, shunts, and reference resistors extend the range of the baste voltmeter and permit current and resistance measurements as well.

3-3. CIRCUIT OPERATION.

3-4. With the FUNCTION selector and RANGE switch properly set, voltage is applied to a photoconductive modulator through a low-pass filter. See figure 3-1.
The filter attenuates ac components present on any input signal, and the modulator converts the remaining dc component to a square wave. A synchronous-motor-driven, light-beam chopper sets modulator frequency at 5/6 power-line frequency. An ac-coupled amplifier amplifies modulator output about 500,000 times.
A demodulator synchronized with the modulator by the light-beam chopper, converts amplifier output to de, The output of the demodulator is filtered and applied through a cathode follower to 1) a feedback network, 2) the DC AMPLIFIER OUTPUT terminals and 3) an output indicator. The feedback network stabilizes the dc gain of the modulator-amplifierdemodulator system to a value of 1111, thereby providing an output of 1 volt for an input of 0.9 millivolt.
The output indicator is a 0-1 voltmeter. The POLARITY switch permits reversal of indicator connections, if required, to obtain up-scale readings.
The POLARITY switch is disabled when the FUNCTION selector is set to OHMS.

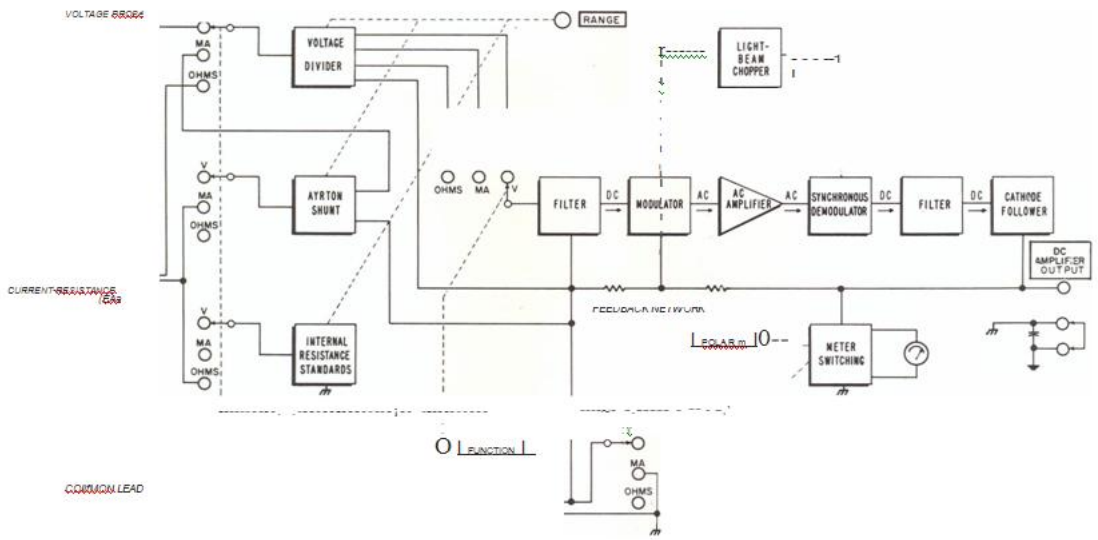

SERVICING ETCHED CIRCUIT BOARDS

Excessive heat or pressure can lift the copper strip from the board. Avoid damage by using a low power soldering iron (SO watts maximum) and following these instructions. Copper that lifts off the board should be cemented in place with a quick drying acetate base cement having good electrical insulating properties.

A break in the copper should be repaired by soldering a short length of tinned copper wire across the break.

Use only high qua lit y rosin core solder when repairing etched circuit boards. NEVER USE PASTE FLUX. After soldering, clean off any excess flux and coat the repaired area with a high quality electrical varnish or lacquer.

When replacing components with multiple mounting pins such as tube sockets, electrolytic capacitors, and potentiometers , it will be necessary to lift each pin slightly, working around the components several times until it is free.

WARNING: If the specific instructions outlined in the steps below regarding etched circuit boards without eyelets are not followed, extensive damage to the etched circuit board will result.

l. Apply heat sparingly to lead of component to be replaced. If lead .of cornponent passes through an eyelet in the circuit board, apply heat on cornponent side of board. If lead of component does not pass through an eyelet, apply heat to conductor side of board.

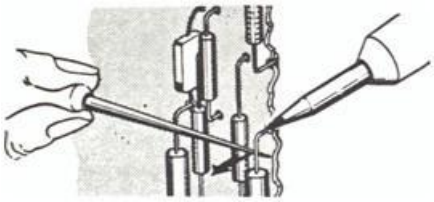

2. Reheat solder in vacant eyelet and quickly insert a small awl to clean inside of hole. If hole does not have an eyelet, insert awl or a #57 drill from conductor side of board.

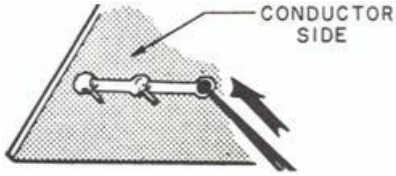

3. Bend clean tinned leads on new part and carefully insert through eyelets or holes in board.

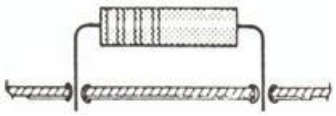

4. Hold part against board (avoid overheating) and solder leads. Apply heat to component leads on correct side of board as explained in step 1.

In the event that either the circuit board has be en damaged or the conventional method is impractical, use method shown below. This is especially applicable for circuit boards without eyelets.

1. Clip lead as shown below, Bend protruding leads up wa rd. Bend lead of new component around protruding Iead, Apply solder using a pair of long nose pliers as a heat sink.

This procedure is used in the field only as an alternate means of repair. It is not used within the factory.